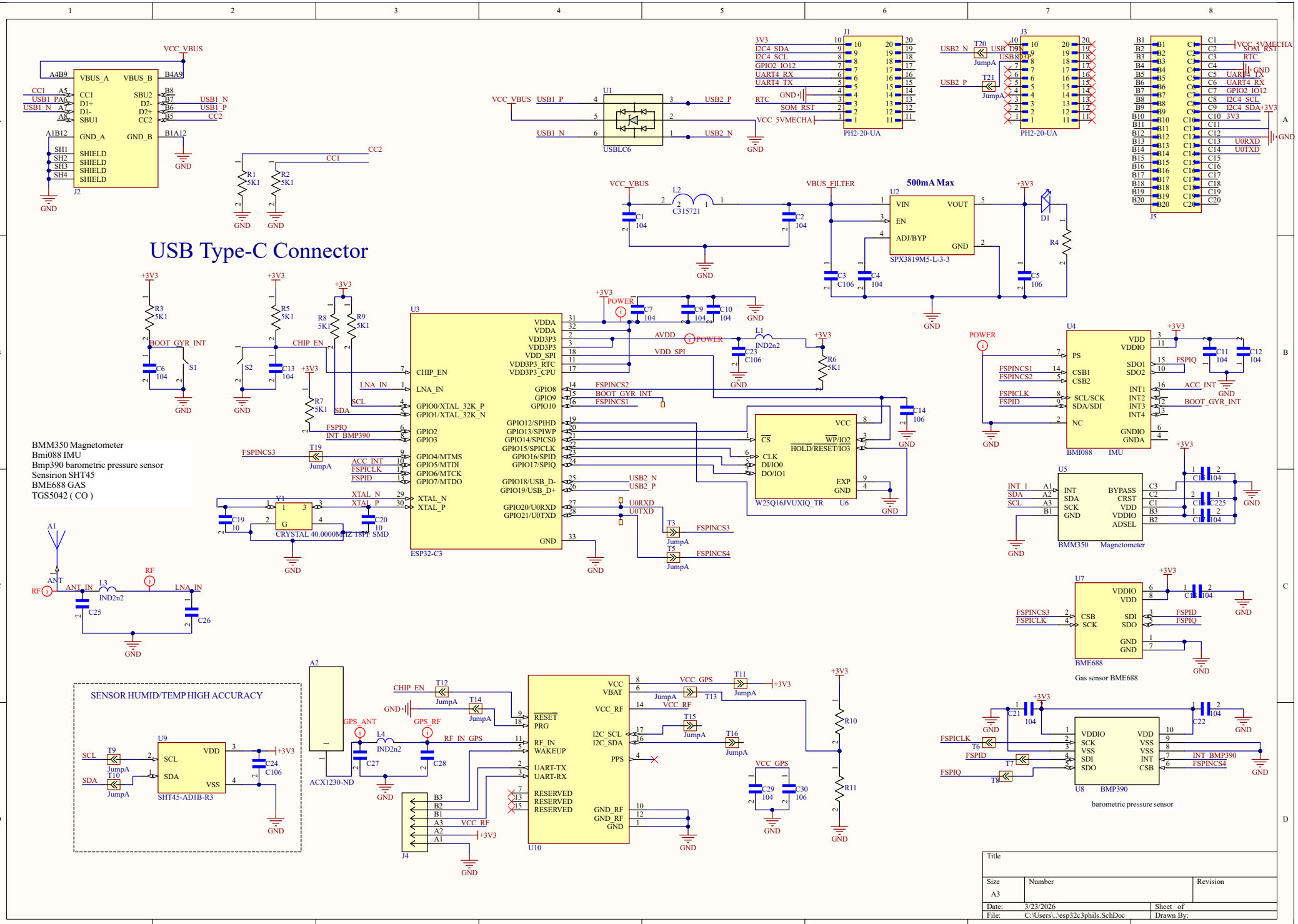
USB Type-C Connector
J2
J1
PH2-20-UA
J3
PH2-20-UA
J5
U1
USBLC6
U2
500mA Max
SPX3819M5-L-3-3
U3
ESP32-C3
U4
BMI088
IMU
U5
BMM350
Magnetometer
U6
W25Q16JVUXIQ_TR
U7
BME688
Gas sensor BME688
U8
BMP390
barometric pressure sensor
U9
SHT45-AD1B-R3
U10
A1
A2
ACX1230-ND
J4
Y1
CRYSTAL 40.0000MHZ 18PF SMD
BMM350 Magnetometer
Bmi088 IMU
Bmp390 barometric pressure sensor
Sensirion SHT45
BME688 GAS
TGS5042 (CO)
SENSOR HUMID/TEMP HIGH ACCURACY
Title
Size
A3
Number
Revision
Date: 3/23/2026
File: C:\Users\..\esp32c3phils.SchDoc
Sheet of
Drawn By: